MUNSCH

Plastic Pumps for Aggressive Media

Chemical Pumps

Vertical Chemical Pump
Type TNP

In PP / PE-UHMW / PVDF
Vertical setting depths up to 1600 mm

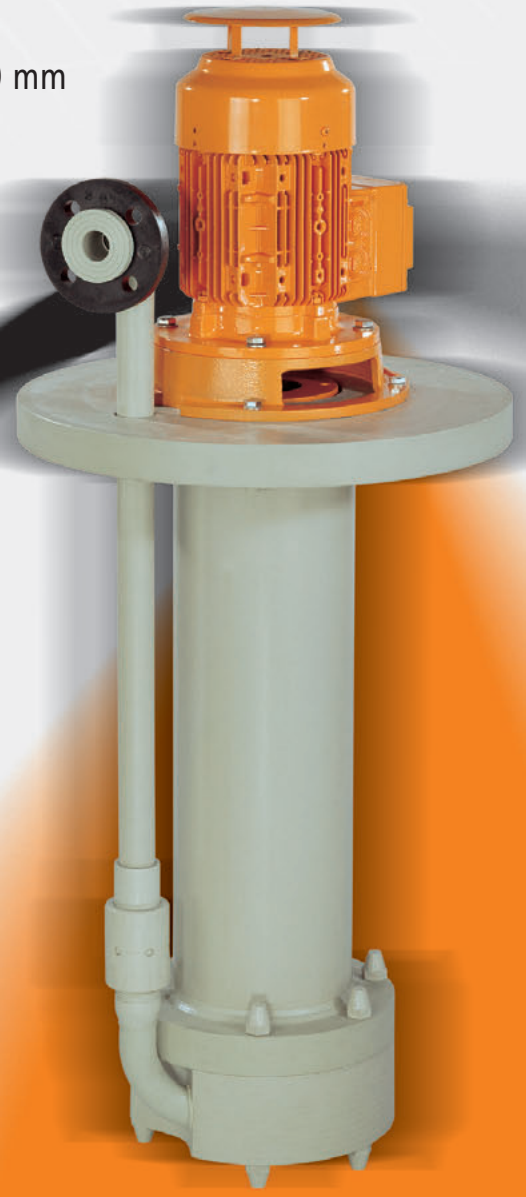

Vertical Chemical Pump TNP

▲ Applications

Type TNP vertical chemical pumps are specifically designed to handle acids, alkalis or chemically contaminated fluids with or without solids. Typical applications include the chemical and metal finishing industries, steel and stainless steel pickling lines, evaporation and regeneration units, wet flue gas scrubbing systems downstream of waste incinerators as well as exhaust gas scrubbing and scrubber effluent treatment.

▲ Construction

Vertical centrifugal pump with volute casing for wet-end installation; dry-end installation possible (see Fig. 1.3); Radial impeller, single-entry, single-stage.

▲ Materials

Part designation	Standard material range		
	PP	PE-UHMW	PVDF
Pump casing	PP	PE-UHMW	PVDF
Casing cover	PP	PE-UHMW	PVDF
Pump shaft	St		
Impeller	PP[1)]	PE-UHMW[1)]	PVDF[1)]
Plain bearing	SSiC		
Secondary seals[2)]	FPM		
Shaft protection sleeve	PP	PP	PVDF
Column pipe	PP	PP	PVDF
Suspension pipe	PP	PP	PVDF
Casing flange	PP	PP	PVDF
Sole plate	PP	PP	PVDF

1) Material combinations possible

2) Alternatives (depending on fluid pumped): EPDM or Viton-PTFE-coated

PP	Polypropylene
PE-UHMW	Ultrahigh-molecular polyethylene
PVDF	Polyvinylidene fluoride
SSiC	High-purity silicon carbide
FPM	Fluoroelastomer
EPDM	Ethylene propylene diene elastomer
PTFE	Polytetrafluoroethylene

▲ Performance data for 50/60 Hz operation[3)]

Pump capacity [Q] up to	110	m^3/h
Total differential head [H] up to	45	m
Motor sizes up to IEC motor size	132	
Vertical setting depths [l] up to	1600	mm

3) The TNP should only be installed in countries with 50 Hz line frequency; procurement of an alternative motor for 60 Hz line frequency with compatible fitting dimensions may be difficult.

▲ Shaft seal

Labyrinth seal

▲ Plain bearing lubrication

Standard: internal flushing with fluid pumped;
Option: external flushing source.

▲ Connecting flange

Standard design with stub end and backing flange to DIN; alternatively to ANSI or JIS.

▲ Drive

Three-phase a.c. motor, frame type V1 with canopy to IEC, IP55 type of enclosure; motor voltage according to customer's specification.

▲ Painting

Base coat: 2-component epoxy resin thick-film primer, single coat, dry-film thickness 40 - 50 µm;
Top coat: 2-component polyurethane finish paint, RAL 2003, pastel orange, 2 coats, dry-film thickness
40 - 50 µm per coat; total dry-film thickness
130 - 150 µm; special coatings available on request.

▲ Maximum allowable service pressures and temperatures

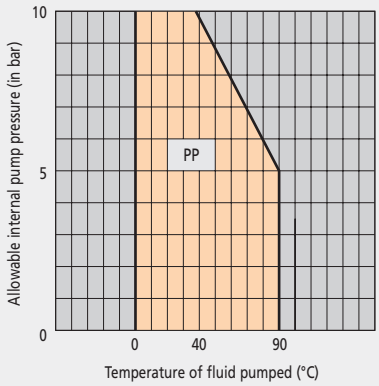

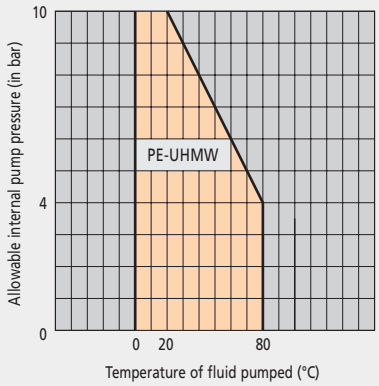

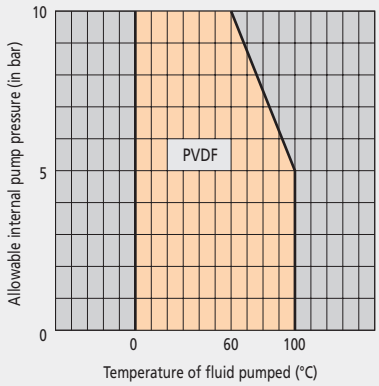

The above maximum allowable service pressures and temperatures relate to the standard pump design. Higher pressure and temperature applications possible in consultation with MUNSCH GmbH.

Design features

1 Column pipe with 90° elbow and flange; connection by a suitable pipe union allows the column pipe and/or the discharge flange to be rotated to virtually any position (Fig. 1.1).
Option: column pipe with flange or design to customer's specification (Fig. 1.2).

2 Motor shaft directly coupled to pump shaft.

3 Maximum setting depth 1600 mm.

4 Vertical setting depth variable in steps of 100 mm (standard); intermediate setting depths possible.

5 Steel shaft with solid plastic protection sleeve.

6 Volute casing, casing cover and suspension pipe fabricated from solid plastics: ample wear allowance, maximum operating reliability in chemically aggressive and abrasive service environments.

7 Solid impeller hub ensures plastics stability even at high temperatures.

8 Optimum hydraulic design using the latest numerical methods ensures: good suction behaviour due to low NPSH requirements, minimum mechanical vibration of components, long service lives of anti-friction and plain bearings, minimized running noise.

9 Impeller: closed and semi-open designs available.

10 Impeller is keyed to the shaft and is therefore bi-directional and unaffected by inadvertent reverse rotation.

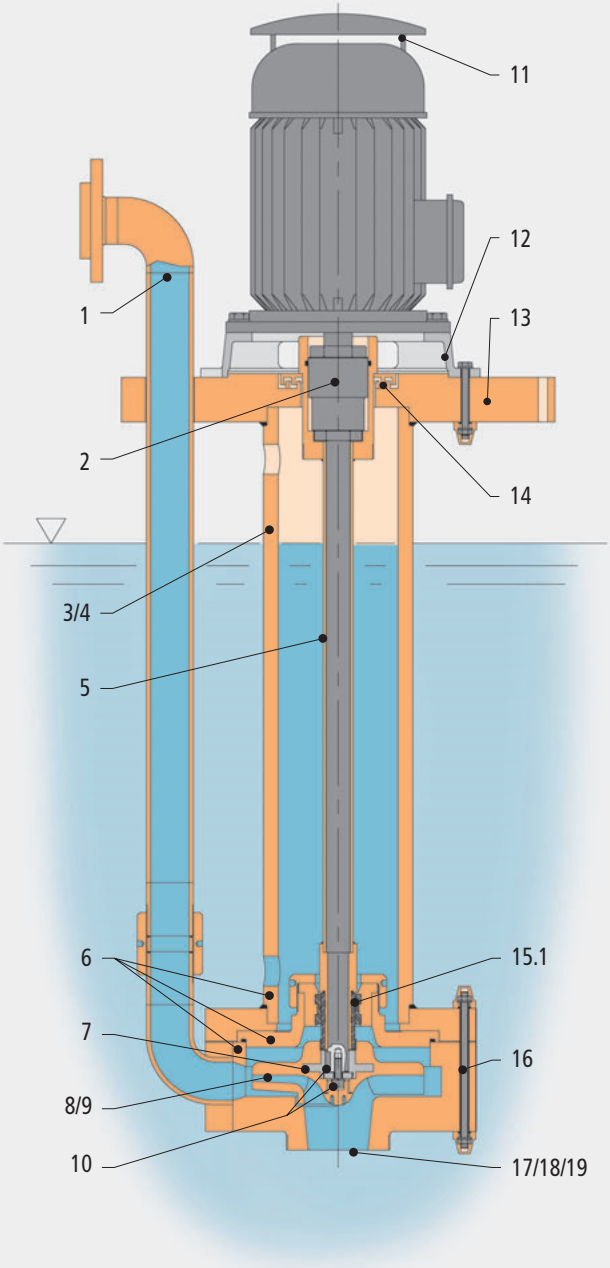

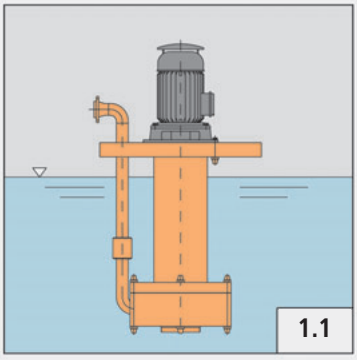

With flange and elbow, wet-end installation

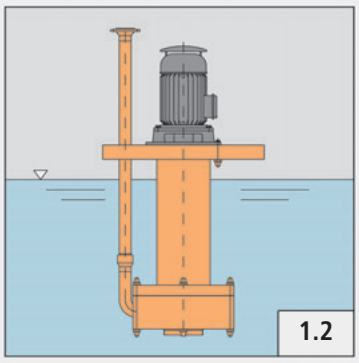

With top flange, wet-end installation

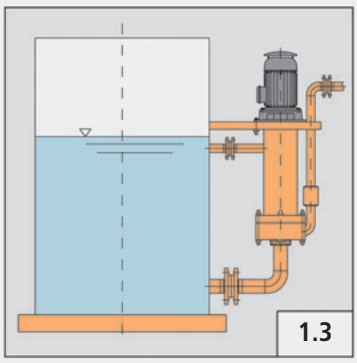

With flange and elbow, dry-end installation

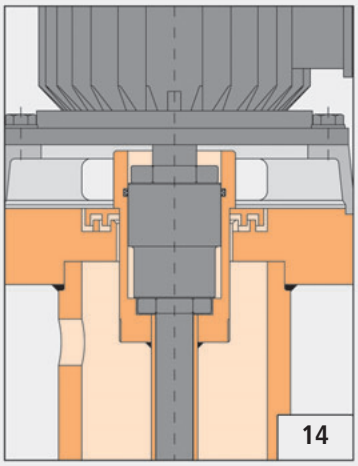

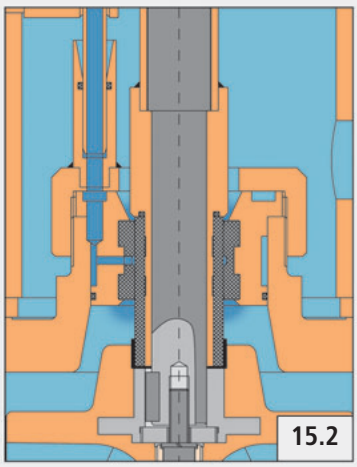

11 Standardized motor, frame type V1 with canopy.

12 Low external height above, compact construction below the sole plate; the TNP can still be installed where conventional pump configurations have space problems.

13 Circular sole plate; special sole plate geometries and sole plates with additional supporting flange (tank cover) available on request.

14 Non-contacting Type 10 labyrinth seal integrated into the sole plate prevents product escaping to the atmosphere. It is typically used in service environments involving no environmental hazards and when the pump tank is vented.

15.1 Product-lubricated plain bearing fabricated from EKasic® C. This advanced silicon carbide not only offers extreme wear resistance but is also resistant to virtually all acids and alkalis.

15.2 External flushing source for plain bearing (option): required when the fluid pumped is loaded with solids or tends to crystallize.

16 The metallic screw connections (threaded rods and cap nuts) reliably absorb the maximum internal casing pressures arising. Corrosion protection is achieved by a plastic coating and plastic cap nuts with O-rings to preclude contact with the fluid pumped.

▲ Accessories/Options

17 Suction strainer,
18 Suction pipe up to a length of 1600 mm,
19 Suction strainer and suction pipe,
20 Motor overload switch (not shown).

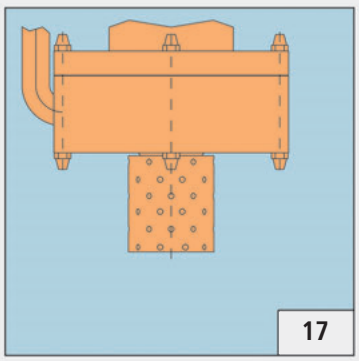

With suction strainer

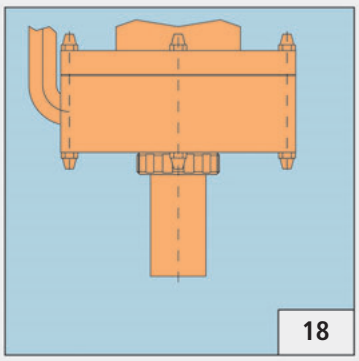

With suction pipe

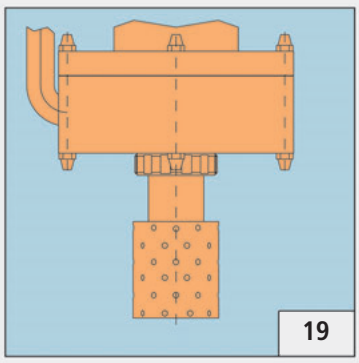

With suction strainer and suction pipe

Performance characteristic charts

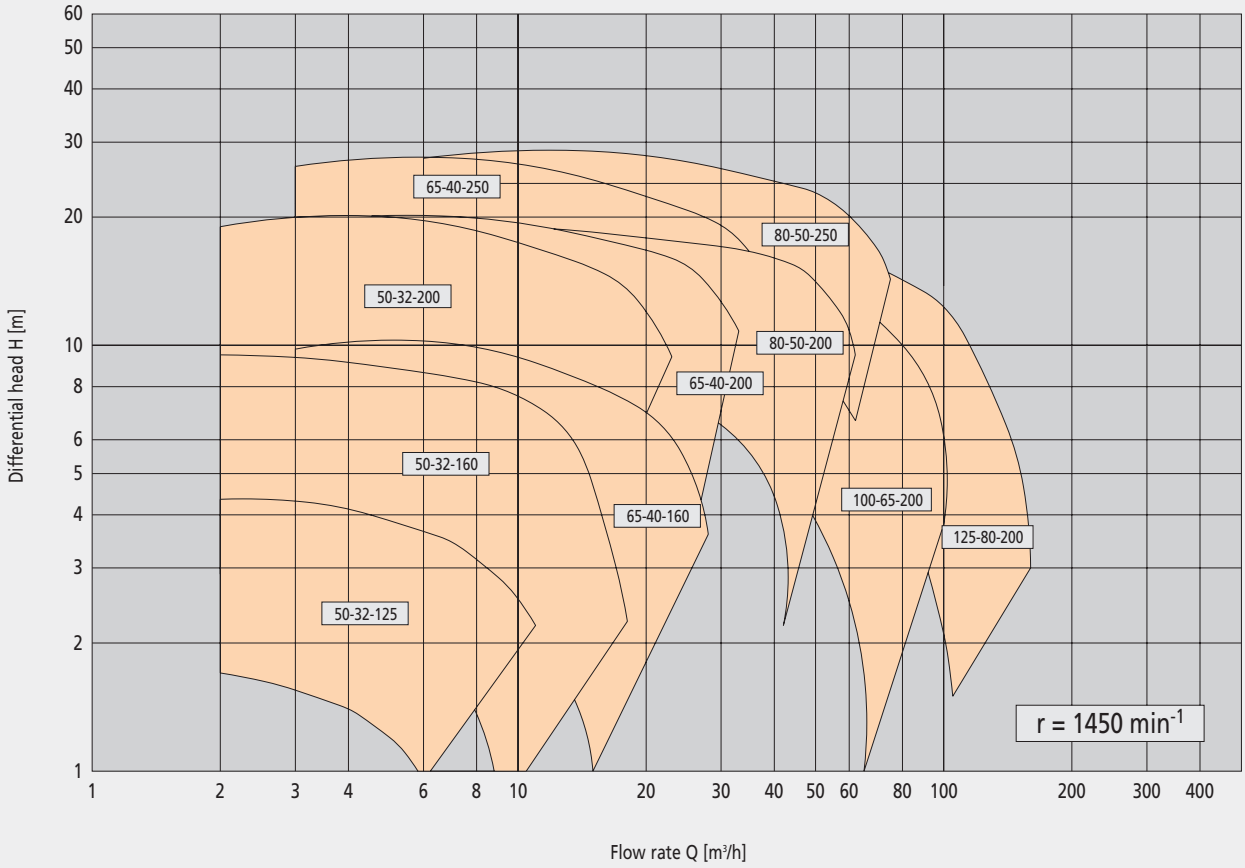

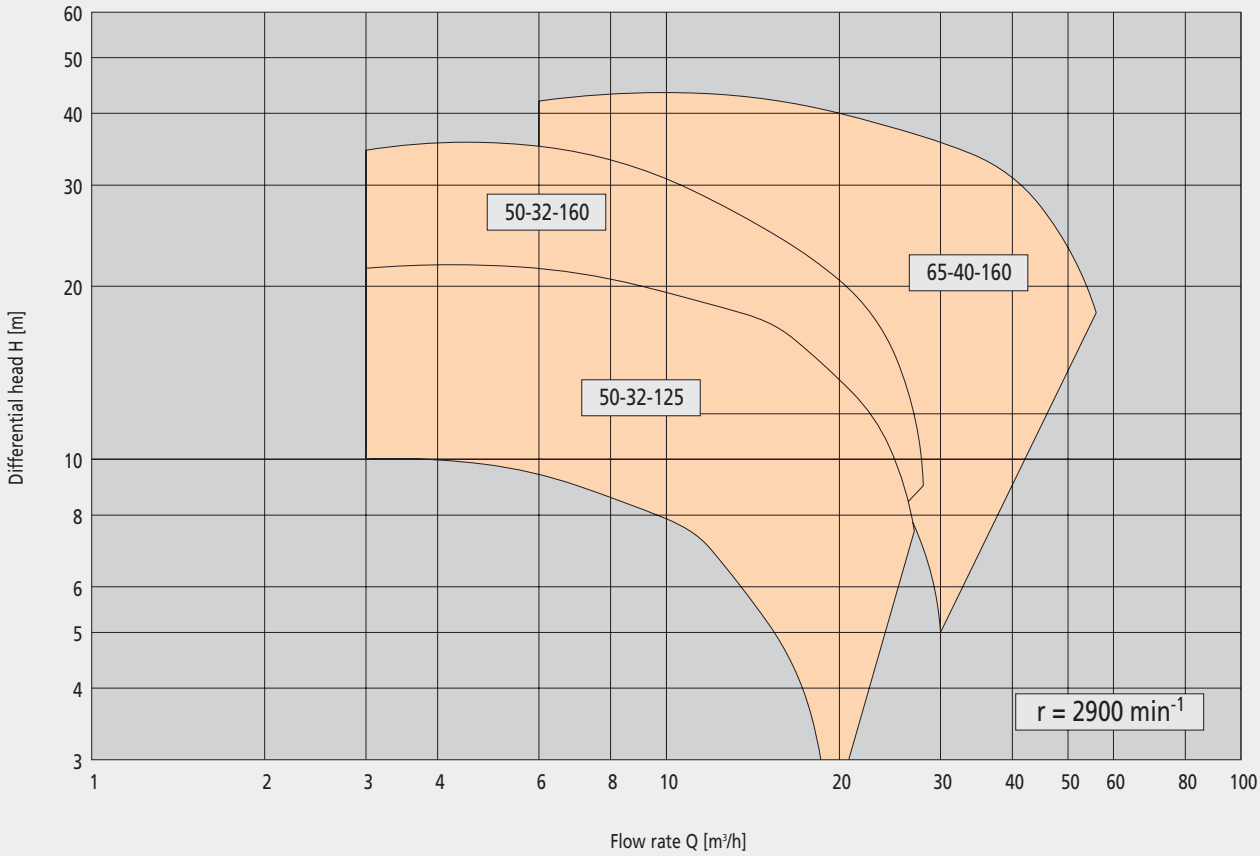

Vertical Chemical Pump TNP

MKFB 0008

Dimensions - Standard design

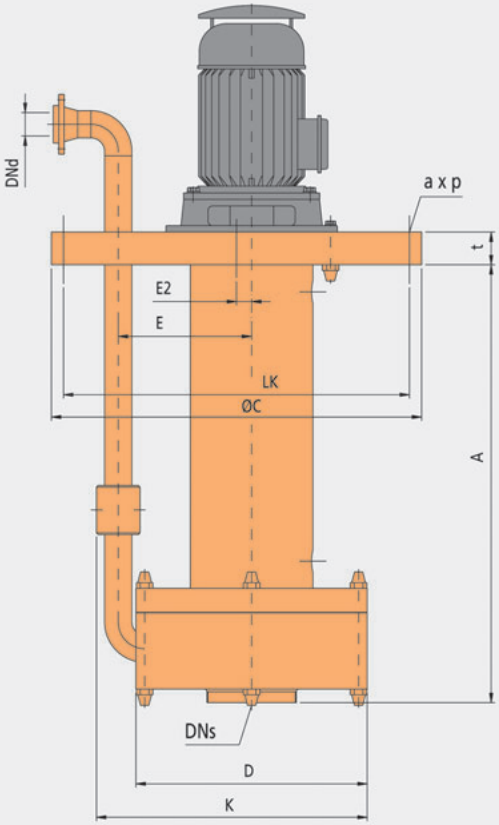

Pump size	DNd	DNs	a	ØC	D	E	E2	K	LK	p	t
50-32-125	32	50	4	350	220	140	0	285	318	12,5	35
50-32-160	32	50	4	480	295	180	0	365	440	12,5	45
50-32-200	32	50	6	540	370	225	20	445	508	12,5	50
65-40-160	40	65	4	480	295	180	0	370	440	12,5	45
65-40-200	40	65	6	540	370	225	20	450	508	12,5	50
65-40-250	40	65	8	590	425	245	45	485	558	12,5	60
80-50-200	50	80	6	540	370	225	20	455	508	12,5	50
80-50-250	50	80	8	590	425	245	45	490	558	12,5	60
100-65-200	65	100	8	590	425	245	45	500	558	12,5	60
125-80-200	80	125	8	590	425	245	45	515	558	12,5	60

Vertical setting depth range [A] as a function of the motor speed	
motor speed [1/min]	TNP
750	400-1600
860	400-1600
950	400-1600
1150	400-1600
1450	400-1600
1750	400-1400
2900	400-1200
3500	400-1000

- Dimensions in [mm]
- For motor dimensions, please refer to motor catalogue
- Weights depend on vertical setting depth and motor size; please contact manufacturer for exact data

Sole plate

The standard pump comes with a circular sole plate (1); rectangular sole plate (2) and supporting flange (3) can be supplied on request.

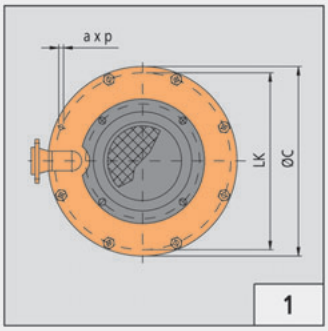

Circular sole plate;
standard

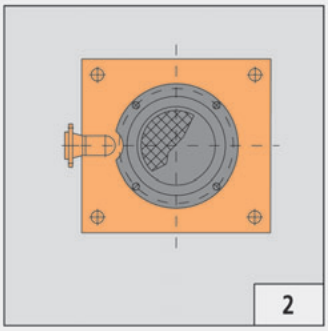

Rectangular sole plate;
special design on request

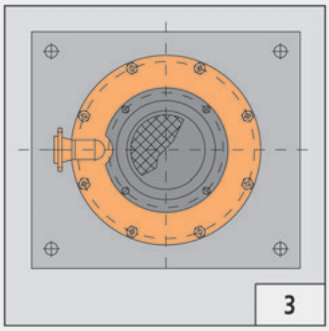

Circular sole plate with supporting flange;
special design on request

MUNSCH Chemie-Pumpen GmbH
Im Staudchen · D-56235 Ransbach-Baumbach
P.O. Box 1 42 · D-56221 Ransbach-Baumbach
Germany
Phone: +49 (0) 26 23 - 8 98 - 90
Fax: +49 (0) 26 23 - 8 98 - 95
Internet: http://www.munsch.de
E-Mail: munsch@munsch.de

Edition May 2006 · All technical data subject to revision · Printed on chlorine-free paper - for the sake of our environment